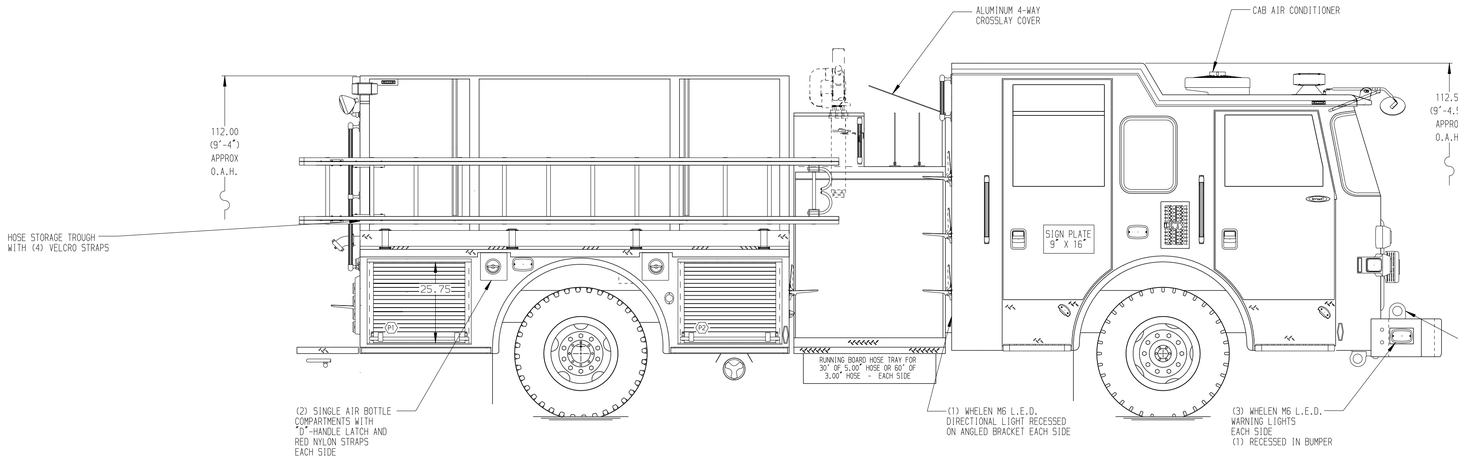

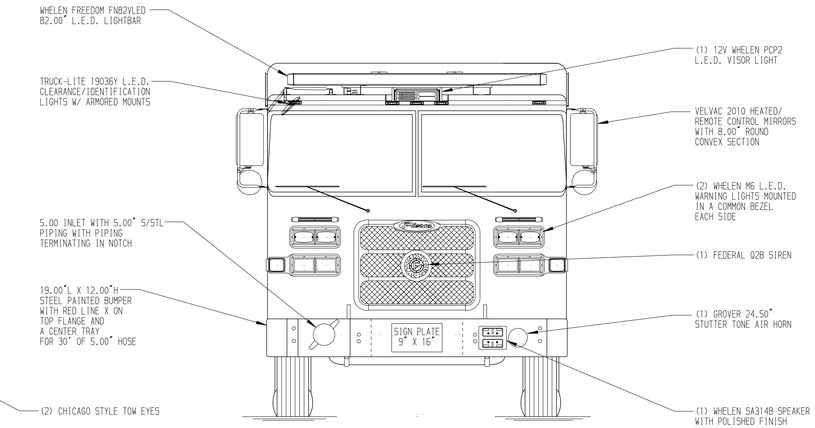

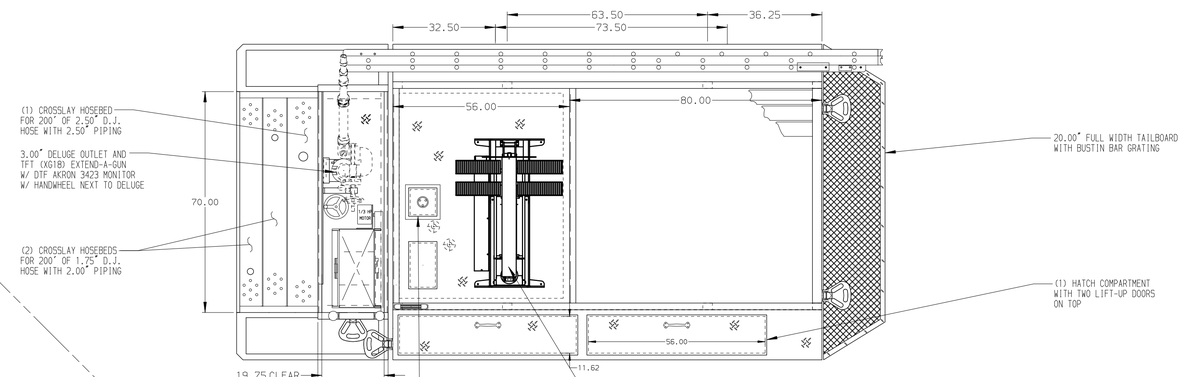

HOSEBED CAPACITIES

1. 200' OF 3.00" D.J. POLY HOSE
2. 1200' OF 5.00" D.J. POLY HOSE
3. 400' OF 3.00" D.J. POLY HOSE
4. 150' OF 1.75" D.J. POLY HOSE
5. 200' OF 2.50" D.J. POLY HOSE
6. 200' OF 2.50" D.J. POLY HOSE

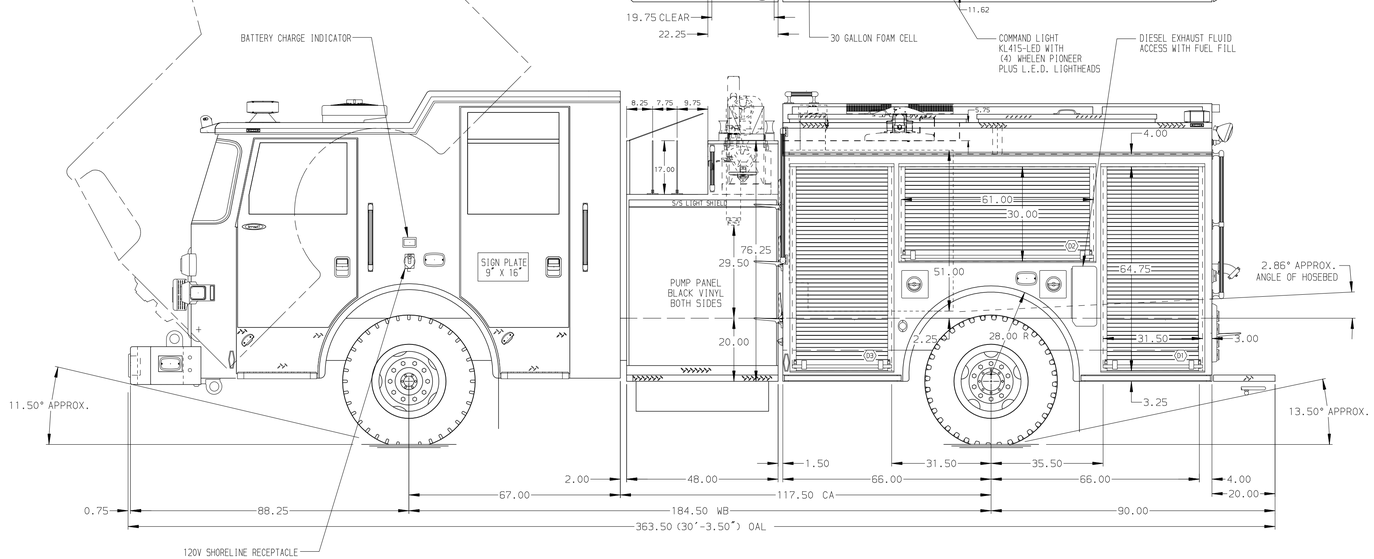

MAXIMUM O.A.H. 112.50"

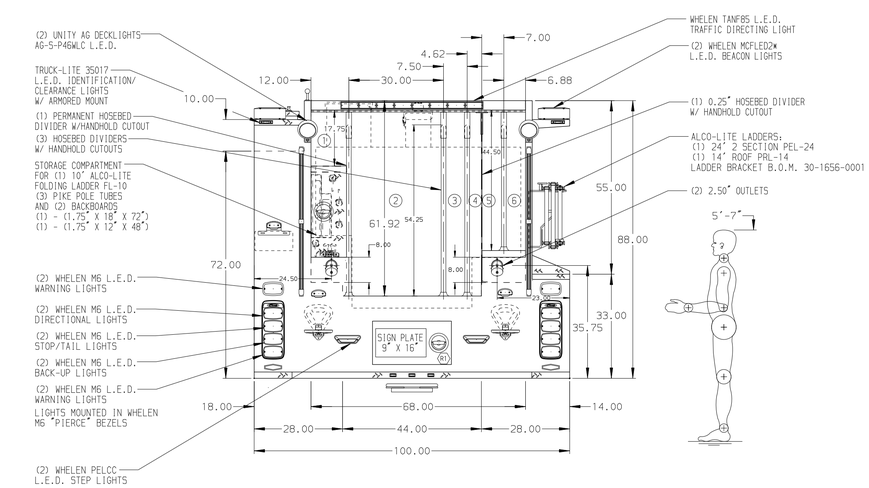

NOTE

DIMENSIONS SHOWN ARE APPROXIMATE AND ARE SUBJECT TO MINOR DEVIATIONS AS MAY OCCUR OR BE NECESSARY IN CONSTRUCTION.
MINOR DETAILS NOT SHOWN.

1. ONSPOT AUTOMATIC TIRE CHAINS TO BE PROVIDED AT REAR
2. MOUNTING BASES FOR ANTENNAS LOCATED PER SHOP ORDER
3. BATTERY CHARGER LOCATED BEHIND DRIVERS SEAT
4. CREW CAB WINDOWS TINTED 44%
5. PERIMETER SCENE LIGHTS LOCATED PER SHOP ORDER
6. PIERCE L.E.D. COMPARTMENT DUAL LIGHT STRIPS LOCATED PER SHOP ORDER
7. SHELF TRACKS LOCATED IN COMPARTMENTS D1 & D3
8. ONE FULL WIDTH/DEPTH PAINTED ADJUSTABLE SHELF IN COMPARTMENTS D1 & D3
9. SWING-OUT TOOL BOARD WITH PEGBOARD PATTERN IN COMPARTMENT D2
10. ONE PERMANENTLY MOUNTED SHELF IN COMPARTMENT D1 & D3
11. KNURLED WINDOW PROTECTOR BARS ON CREW CAB WINDOWS
12. MOUNTING RACK FOR (3) FIRE EXTINGUISHERS LOCATED IN COMPARTMENT R1
13. S/STL FENDER CROWNS FRONT AND REAR
14. ALUMINUM TREADPLATE ON EXTERIOR REAR WALL OF CAB AND ON RAISED CAB ROOF
15. ALL FOLDING STEPS TO BE EBERHARD UNLESS SPECIFIED
16. TWO WINDOW DEFROST FANS LOCATED IN CAB
17. AIR INLET/OUTLET W/ DISCONNECT FITTING LOCATED ON DS PUMP PANEL
18. HANNAY HOSE REEL MODEL EC18-25-26 LOCATED IN CARGO AREA FOR 1.00" FORESTRY HOSE
19. PIERCE LOGO MUDFLAPS FRONT AND REAR
20. AUXILIARY COOLING SYSTEM LOCATED IN PUMPHOUSE
21. INVERTER LOCATED IN EMS CABINET
22. AUTO TRANSFER SWITCH LOCATED IN EMS CABINET

REV	DATE	BY	CH
7	22DEC14	BZI	ANG
6	21NOV14	BZI	ANG

CHASSIS DATA
MAKE: PIERCE
MODEL: ARROW XT

Pierce MANUFACTURING INC.

TITLE: 1000-D-500 GAL POLY W/ 30 GAL FOAM CELL, 136" BODY (3)XLAYS, DELUGE, LIGHT TOWER, HOSE STORAGE REEL
FOR: DEKALB COUNTY FIRE RESCUE DEPARTMENT TUCKER, GEORGIA
DWG NO.: 28273AD

JOB NO.	28273 01-06
SCALE	1:24
DATE	
DRAWN BY	BZI 10SEP14
CHECKED BY	CTR 11SEP14
SHEET SIZE	D
SHEET NO.	1 OF 1

View File Created 23-DEC-2014 08:44:51